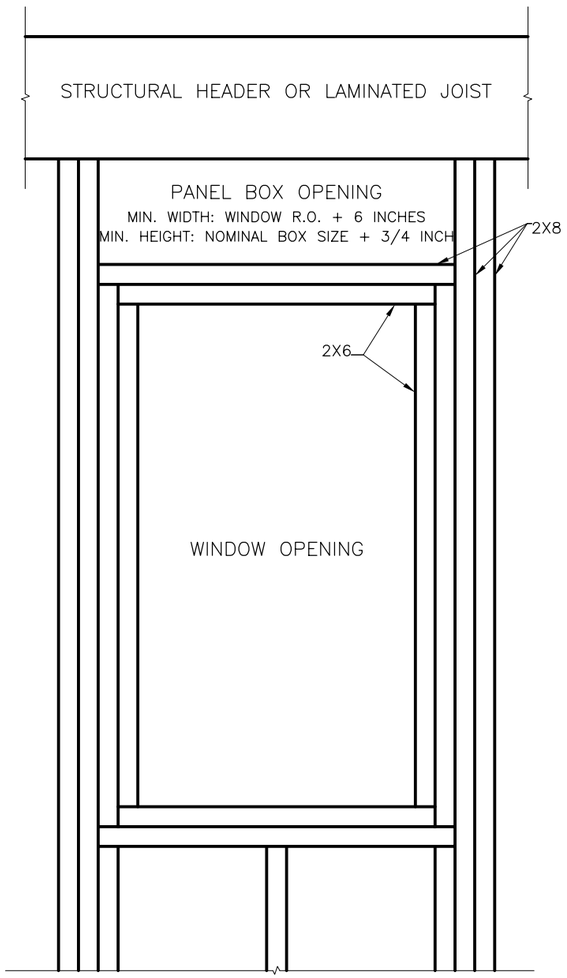

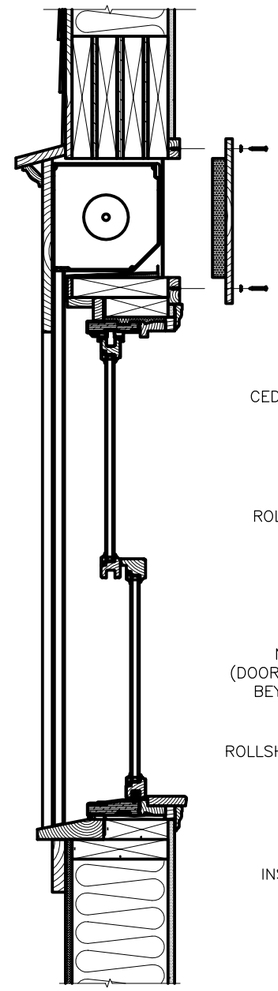

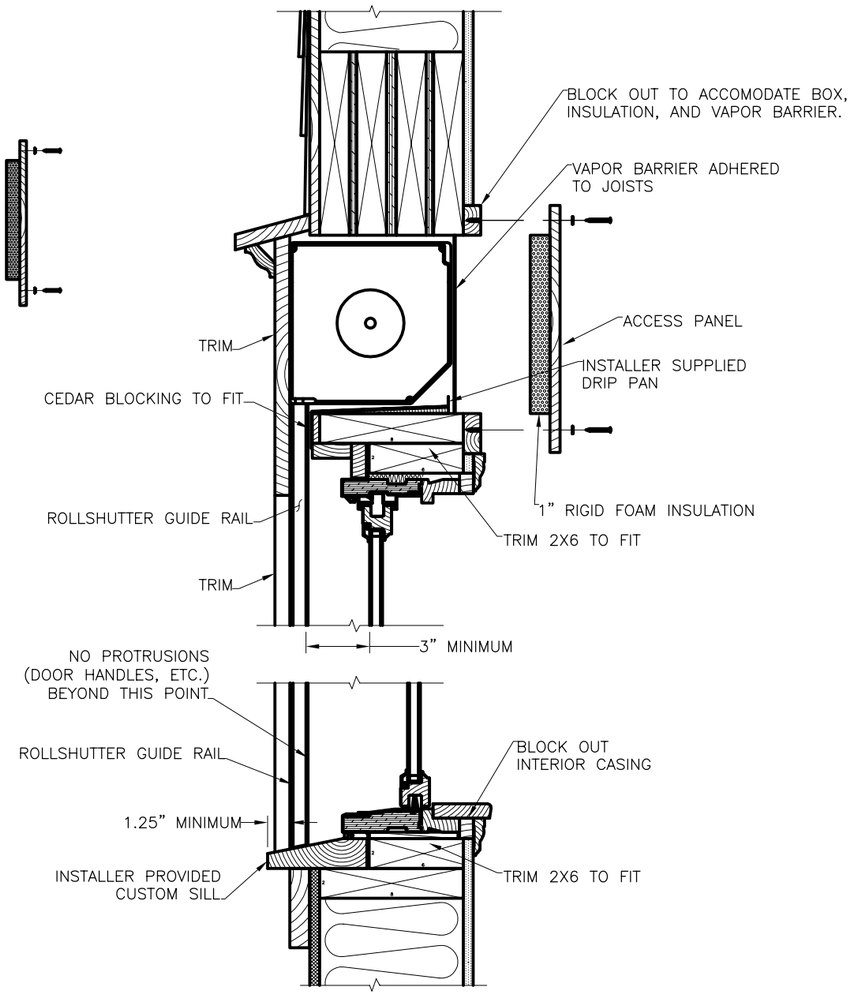

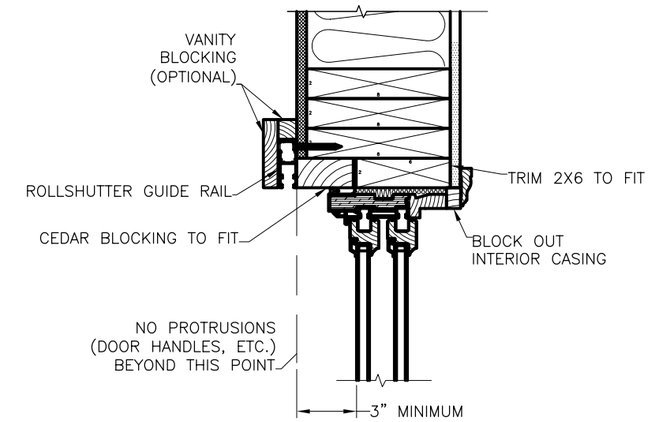

VERTICAL CROSS SECTION (LOOKING DOWN)

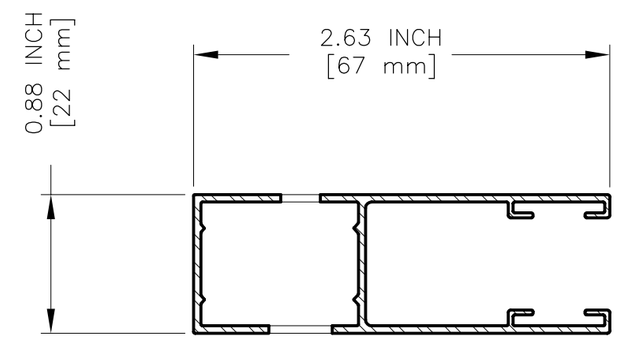

HTF 40 RAIL

THIS DRAWING CONTAINS TRADE SECRETS AND CONFIDENTIAL AND PROPRIETARY INFORMATION OF SHADE & SHUTTER SYSTEMS, INC.
IT IS NOT TO BE USED OR DISCLOSED WITHOUT EXPRESS WRITTEN PERMISSION OF SHADE& SHUTTER SYSTEMS, INC.

By accepting the document you agree to the above.

Copyright © Shade & Shutter Systems, Inc. 2003. All rights reserved.

NO.	DATE	BY	REVISION
8			
7			
6			
5	5/15/06	PHB	REMOVED WINDOW REFERENCE, ADDED BOX OPENING SIZES
4	11/11/04	PHB	REVISED HEADER. ADDED MISSING 2X8. FIXED CALLOUTS.
3	11/04/04	PHB	FIXED DIMENSIONS OF HTF 40 RAIL ENLARGEMENT
2	11/03/04	PHB	UPDATED ADDRESS, ADDED HTF 40 RAIL, RESCALED TO 1"=1' FOR MAIN VIEWS
1	07/15/03	PHB	CHANGED BOX TO 8" FROM 7". ADDED INTERIOR BLOCKING

CUSTOMER APPROVAL:
BY:
DATE:

BY: PHB
SCALE: VARIES
DATE: 07 14 03

SHADE & SHUTTER SYSTEMS, INC.
350 KIDDS HILL ROAD
HYANNIS MA 02601 USA

REVERSE BOX, HTF 40 RAIL WITH 3" CLEARANCE, 2X8 STUDS

CUSTOMER PART NUMBER: number
S&SS PART NUMBER: number
FILE NAME: SSA112-2
VERSION: 1
DISK: \CDD\...
REVISION: 5
DRAWING NAME: SSA112-2 1 5